Santec

IL Swept Test System Sample Software manual

2026-03-02

1. Project Overview

This is sample software for a swept test system for IL measurements.
You need to select the appropriate version for your installed LabVIEW (whether it is a 64-bit or 32-bit version) to download and install the application. Inconsistent versions will result in the inability to run the program.

development environment (computer)	Labview 2017
Instrument.DLL	Version 3.0.3
STSProcess.DLL	Version 2.2.8
NI DLL	17.6 and its successors

2. configure

(1) Tunable Laser TSL Series (TSL-550/TSL-710/TSL-570/ TSL-770/ TSL-775)

(2) Power Meter MPM Series (MPM-210/210H/220/211/212/213/215/217)

This sample software allows you to control up to two MPM hosts (MPM-210 or MPM-210H or MPM-220).

Communication settings

Tunable Laser (TSL) Control

TSL-550/710:	GPIB
TSL-570/ TSL-770/TSL-775:	GPIB, TCP/IP, USB

* It can be changed on the source code. The initial value of the separator is CRLF.

Power Meter (MPM) Controls

MPM-210/210H/220:	GPIB, TCP/IP and USB

connecting reference

1. MPM-210/210H

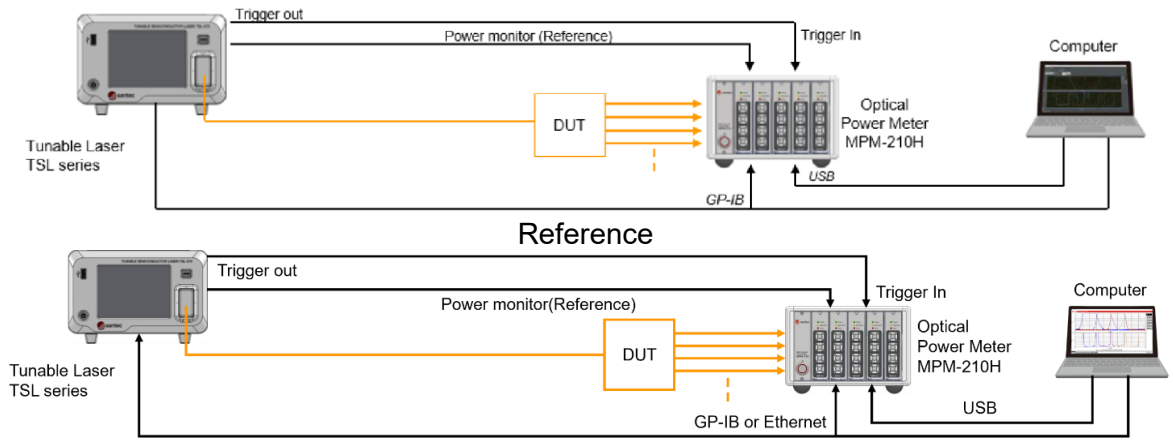

Measurement

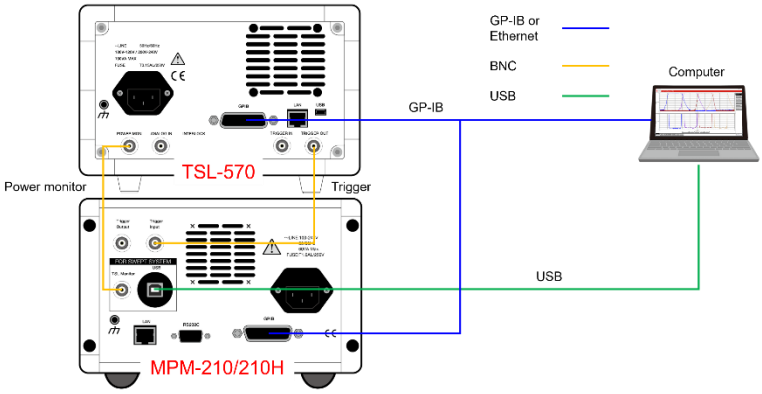

Use a BNC cable to connect the following parts.

TSL-*** Trigger Output -> MPM-210H Trigger Input

TSL-*** Power Monitor -> MPM-210H TSL Monitor

Figure 1. MPM210/210H connection configuration

2. MPM-220 Standard Mode

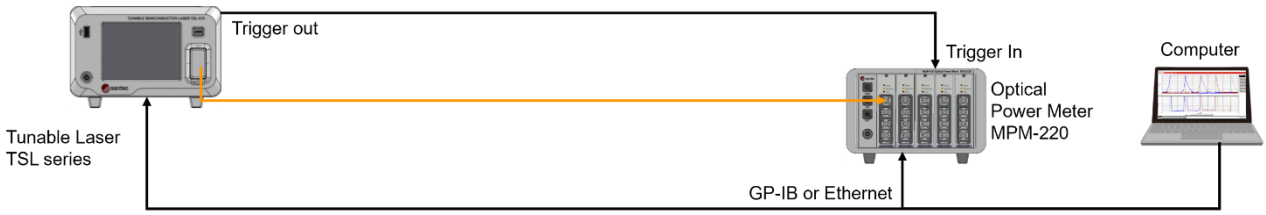

Reference

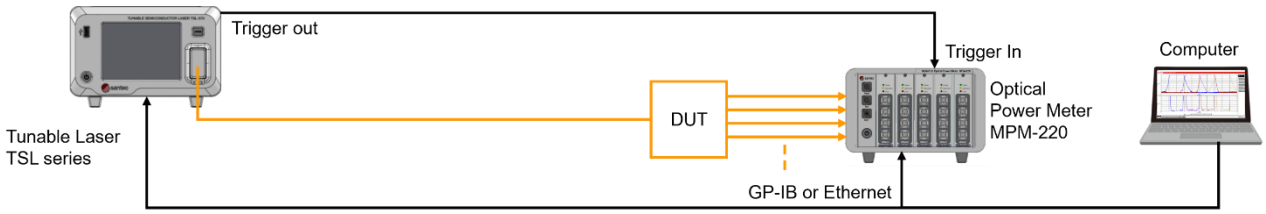

Measurement

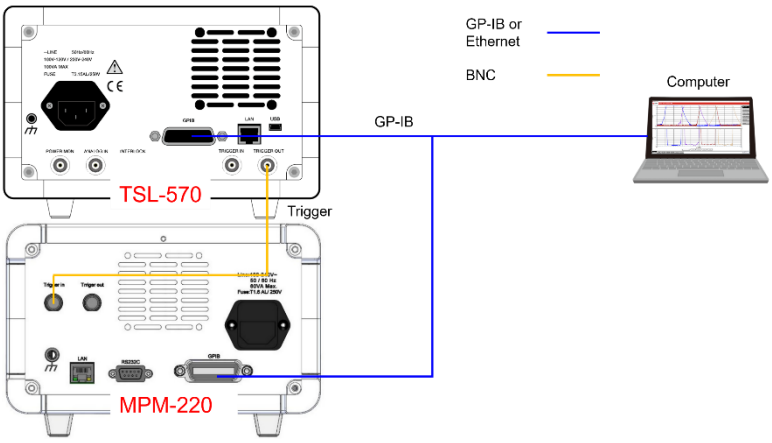

Use a BNC cable to connect the following parts.

TSL-*** Trigger Output -> MPM-210H Trigger Input

Figure 2.MPM-220 Standard Mode

3. MPM-220 High-Spec 模式

Reference

Connect the following parts using optical fiber patch cords.

TSL laser output port (power output) ->The topmost input port on the left side of MPM-220

The middle output port on the left side of MPM-220 -> The topmost input port of the first module of MPM-220

The bottommost output port on the left side of MPM-220 -> The input port that MPM-220 needs to use

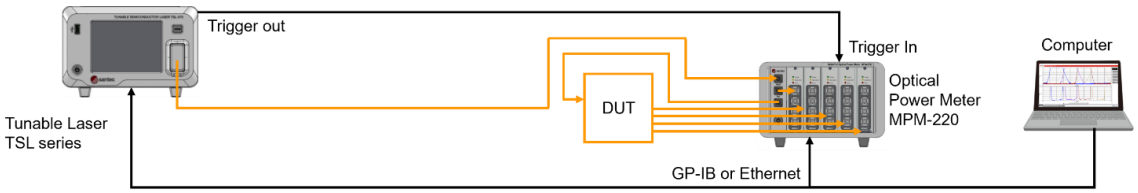

Measurement

Connect the following parts using optical fiber patch cords.

TSL laser output port (power output) -> The topmost input port on the left side of MPM-220

The middle output port on the left side of MPM-220 -> The topmost input port of the first module on the left side of MPM-220

The bottommost output port on the left side of MPM-220 -> The laser input port of the DUT

The laser input port of the DUT -> The input port that MPM-220 needs to use

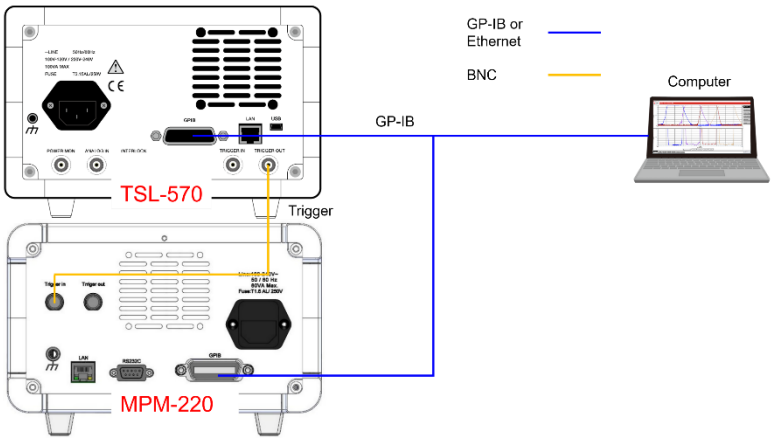

Use a BNC cable to connect the following parts.

TSL-*** Trigger Output -> MPM-210H Trigger Input

Figure 3. MPM-220 High-Spec Mode

3. procedure

Software operation is mainly divided into two stages: 1. Instrument connection and parameter setting (completed in the instrument settings window); 2. Reference data acquisition and polarization-related loss measurement (completed in the main window)

3.1 Instrument Settings Window

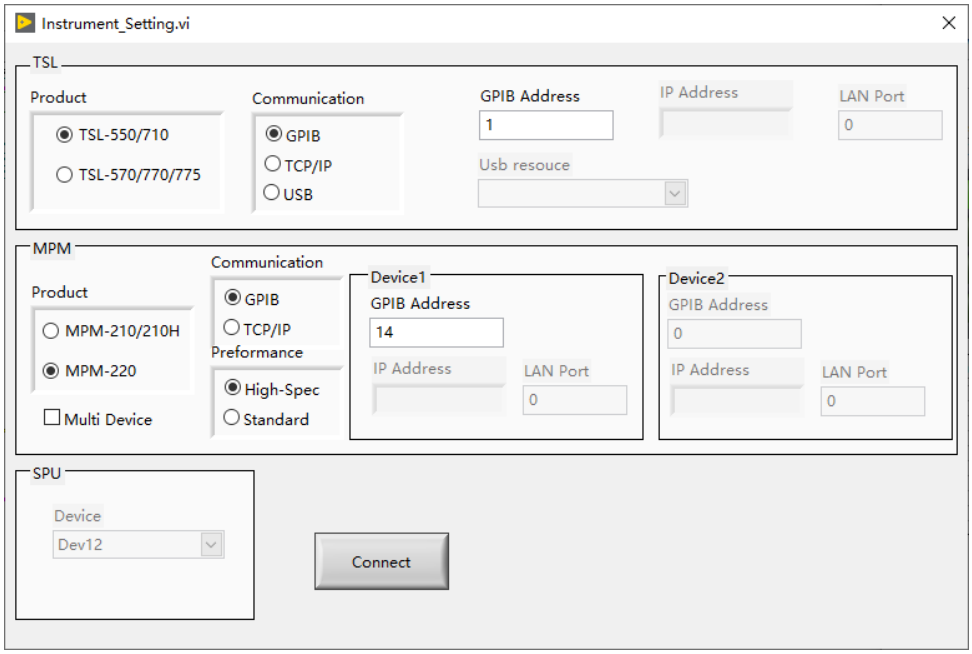

Figure 4. Instrument Setup Window

1) Functions - Instrument Settings

This window will automatically pop up when the software starts (or it needs to be called from the main window). Users need to complete all the basic connection configurations for the testing instruments in this window. After the configuration is completed, click the 'Connect' button, and the software will connect the instruments and enter the main operation interface (Figure 8).

1. Form Load

   The device number of the SPU (DAQ) connected to the PC (**when the power meter model is MPM-210/210H**) and the USB resources (**when the TSL-570 interface is USB**) are received from the main form and displayed in each Combobox control.

2. TSL

   Displaying TSL communication setting information

3. MPM

   Display the communication settings information of MPM. It can be used for a maximum of two hosts (**when using MPM-220 High-Spec mode, the first port on the first slot of the power meter is the default reference channel and selection is prohibited**)

4. SPU

   Display the device number of DAQ (**This option needs to be set only when using the MPM-210/210H power meter host. For MPM-220 or other hosts, this setting is invalid or hidden**).

5. Connect

   After setting up each measuring instrument in Figure 4, press the "Connect" button and the STS PDL Demo software interface is shown in Figure 5.

3.2 STS IL Sample Software Window

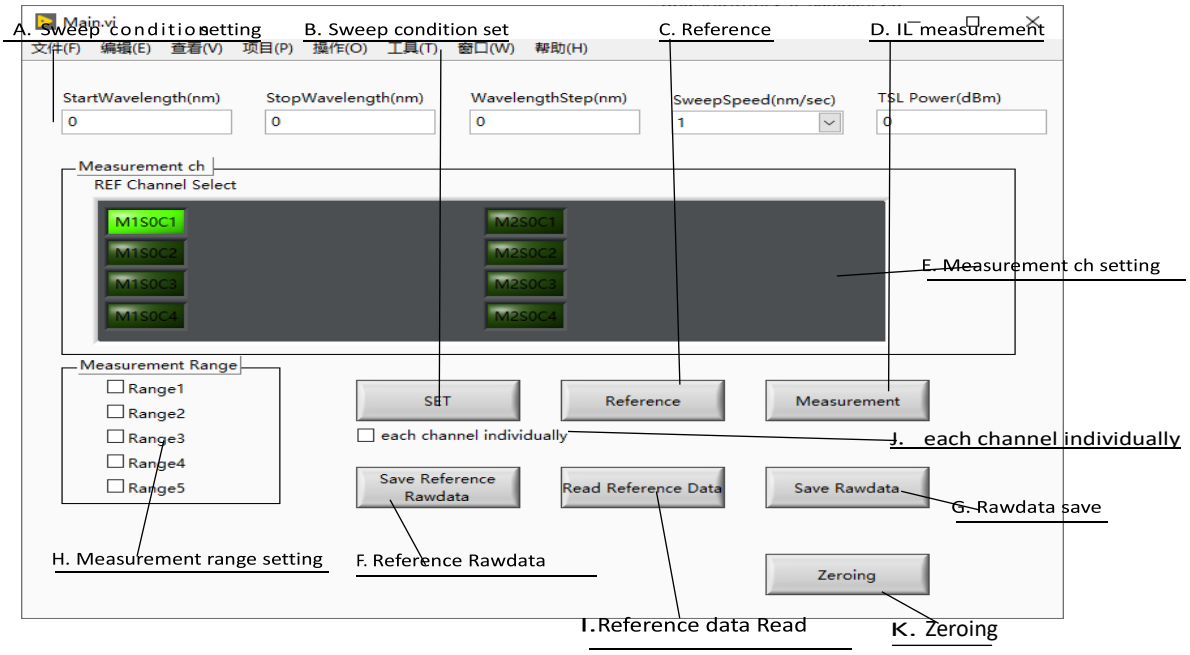

Figure 5. IL-STS Sample Software Window

1) How to use

1. Tunable Laser Settings

Enter the scanning conditions in the Scan Settings (A) box

Starting wavelength (nm)	starting wavelength
Stop Wavelength(nm)	Stop Wavelength
Step wavelength(nm)	Measurement data step wavelength
Scanning speed (nm/s)	scanning speed
TSL Power (dBm)	TSL Output Power

2. Power meter settings

Set Measurement ch (F) and Measurement Range (G) in the Measurement Channels and Range frame. (This option is disabled if using the MPM215 module.)

Set the channels of the power meter module at Measurement ch (F). When multiple channels are selected, multiple devices of the measured channel (DUT) can be measured simultaneously.

Set the range for each scan at Measurement Range (G). When multiple ranges are selected, high dynamic range measurement can be performed. This function is effective when the dynamic range of the DUT is 40 dB or higher (see below for details).

Each scan can measure approximately 40 dB of dynamic range.

Selecting multiple channels (2) allows for simultaneous measurement of multiple DUT ports. Selecting multiple ranges (3) is used for high dynamic range measurement (see below for details).

Under the following conditions, the dynamic range of the DUT is set to 60 dB, the output power of the light source is set to 8 dBm, and the DUT is connected directly without the need to insert a splitter between the tunable devices

Range number:	2
1st Range:	Range 1
2nd Range:	Range 4

3. Setting the set parameters to each instrument

The set parameters are set to each instrument when the "SET(B)" button is clicked. The set parameters are passed to each instrument class and STS Process class. The STS data structure required to retain data in the STS process is also set.

This step must be carried out before conducting the reference measurement. Once successfully set up, the instrument status (such as wavelength, power, range) should change accordingly.

4. Reference data testing

When the "Reference (C)" button is clicked, Reference data is acquired under the conditions set in 1 and 2.

*When multiple measurement ranges are set, reference data is acquired in the first range. When multiple channels are selected and EACH CHANNEL INDIVIDUALLY(J) is checked, each channel acquires data individually for use at Reference(C).

***Regarding multiple ranges: "When multiple measurement ranges are set, the reference data is only collected in the first range (Range 1)."**

Regarding multiple channels: "When multiple channels (F) are selected and the 'each channel individually' (I) option is checked, the software will collect and store the corresponding reference data for each selected channel separately.

When collecting the reference data, the DUT should be removed or bypassed (for example, using a straight-through optical fiber connection between the PCU and the MPM) to establish the reference value without DUT loss. This step is crucial for subsequent calculation of Insertion loss (IL)."

5. Insertion Loss Test

After clicking the "Measure (D)" button, Insertion Loss (hereinafter referred to as IL) is tested under the conditions set in 1 and 2. When multiple

measurement ranges are set, the Sweep process is performed with the number of ranges set, and the data is merged in the STS Process class. After that, the IL data is calculated and output as a file. Sweep processing is detailed in 4).

6. Reference Raw Data Preservation

Clicking the "Save Reference Rawdata (F)" button specifies the STS Data Struct when reading Reference Rawdata from the STS Process class. The Reference Rawdata is saved as a csv file in the specified path. When multiple channels are selected and each channel individually (J) is checked, the monitordata for each channel is saved separately.

7. Raw Data Retention

After the "Rawdata (G)" button, the measurement data is read by Measure (D) in the STS Process class. When the STS Data Struct is specified, the measurement data is saved as a csv file in the specified path.

8. Reference data reading

After reading the Reference data saved in 6.), this data is passed to the "STS Process" class. When multiple channels are selected and each channel individually(J) is selected, each channel needs its own monitordata when reading.

Note: The loaded reference data must be compatible with the current instrument settings (such as wavelength range, step size, etc.); otherwise, it may lead to calculation errors.

9. The connected MPM is electrically returned to zero

4. Detailed Explanation of the Scanning Process

4.1 Scanning Procedure

1. Set TSL as the starting wavelength for measurement and set the MPM range.
2. Place the TSL in Trigger Signal Input Standby mode and start the scanning process.
3. MPM begins recording.
4. SPU started recording. **(Enable with MPM-210H/220. If using MPM220, ignore this action.)**
5. Issue a soft trigger for the TSL.
6. Wait for the SPU and MPM records to complete. **(Enable with MPM-210H/220. If using MPM220, ignore this action.)** *2

7. Wait for TSL scanning to complete.

8. Set TSL to the scan start wavelength.

9. Read the measurement data from the MPM and SPU and pass these data and the STS Data Struct to the "STS Process" class.

10. Perform data processing in the STS Process class.

*When multiple measurement ranges are set, data processing can be performed at once.

For multiple sweeps (acquiring multiple ranges), after executing process 9, check the busy status of the TSL and repeat from process 1.

*2

MPM runs in FreerunMode. If there is no trigger signal input from the TSL, the MPM measurement will not start. In this example software, if the MPM measurement does not complete after a sample time of +2000 milliseconds, Sweep_Process.Vi, which performs the Sweep processing, is coded to return -9999 as an error.